CHPC
NEW YORK CITY

August 2022

From Lot to Neighborhood to City:

AN ACTION PLAN FOR BASEMENT FLOOD SAFETY & STORMWATER EQUITY

ACKNOWLEDGMENTS

WRITTEN BY:

Katherine Leitch, Senior Policy Analyst
Camille MacLean, Policy Analyst

EDITING BY:

Sarah Watson, Interim Executive Director
Katherine Leitch, Senior Policy Analyst
Madelaine Britt, Policy Analyst
Camille MacLean, Policy Analyst

SPECIAL THANKS TO:

Mark Ginsberg, FAIA, LEED AP
Harold Shultz
Charlie LaBatt, PE
Ryan Chavez
NYC Department of Housing Preservation & Development
The Mayor's Office of Climate and Environmental Justice
The Mayor's Office of Recovery and Resiliency
The BASE Campaign

CHPC is a proud member of the BASE Campaign

BASE
Basement Apartments Safe for Everyone

CHPC STAFF:

Sarah Watson,
Interim Deputy Director

Katherine Leitch,
Senior Policy Analyst

Madeline Britt,
Policy Analyst

Windel Desir,
Policy Analyst

Camille MacLean,
Policy Analyst

Sonali Govind,
Ginsberg Fellow

Vivienne Davis,
Administrative Assistant/
Program Associate

ABOUT CHPC

Citizens Housing & Planning Council (CHPC) is a nonprofit research and education organization focused on housing policy and planning in New York City. Since our founding in 1937, CHPC's mission has been to develop and advance practical public policies to support the housing stock of the city by better understanding New York's most pressing housing and neighborhood needs.

For more than 80 years, CHPC's research and education work has helped shape public policy to improve the city's housing stock and quality of life in New York City's neighborhoods. A team of expert research staff is led by a diverse board of practitioners in the fields of urban planning, architecture, zoning and land use law, housing finance and development, and community development.

Our work brings clarity to New York City's housing issues by presenting research in relatable and engaging ways. Our agenda is practical and always begins with questions, not answers. It is the data, our analysis, and its relevance to the real world that drive our conclusions.

INTRODUCTION

The legalization of basement apartments is a policy issue that lives at the intersection of housing, climate change, and social justice. New York's expensive and highly constrained housing market drives many low-income families with little housing choice into informal rental apartments that exist outside of city oversight. As a result, some New Yorkers end up living in substandard or even hazardous conditions. Hurricane Ida cruelly exposed the dangers of living in apartments that haven't been vetted for safety.

On September 1, 2021, Hurricane Ida poured rain on the city at a record-breaking level. In a single hour, 3.15 inches fell—a rate well above the previous high.[1] The extreme rain event overwhelmed New York City's antiquated combined sewer system and created a flood event that was previously unimaginable. Alarmingly, Ida revealed that New York City residents outside of the coastal floodplain, especially those living in basement and ground floor apartments, are vulnerable to devastating flooding.

In fact, many more residential properties are impacted by stormwater flooding than coastal flooding. About 2% of New York City's one- to four-family residential lots fall within current coastal flood zones, while roughly 25% of residential lots intersect with a projected area of stormwater flooding during an event like Hurricane Ida.[2] In areas where the Federal Emergency Management Agency (FEMA) has identified a coastal flood risk, the city's building code prohibits existence of bedrooms, dining rooms, and other habitable space below the flood elevation.[3] Basement apartments cannot

STORMWATER FLOOD AREA

PROJECTED AREA OF STORMWATER FLOODING

SMALL HOME INLAND FLOOD RISK

LOT WITH NO STORMWATER FLOOD RISK

LOT WITH STORMWATER FLOOD RISK

NOTES

Stormwater
Projected area of stormwater flooding is based on a 100-year storm thought to have a 1-percent chance of occurring in any given year. It is defined by 3.5-inches of rain per hour and 4.8 feet of sea level rise. Source: NYC Stormwater Flood Map - Extreme Flood via NYC Open Data.

Lot Information
All lots shown contain 1 to 4 residential units and have a basement or a cellar. Source: PLUTO21v1 which contains extensive land use and geographic data at the tax lot level via BYTES of the BIG APPLE.

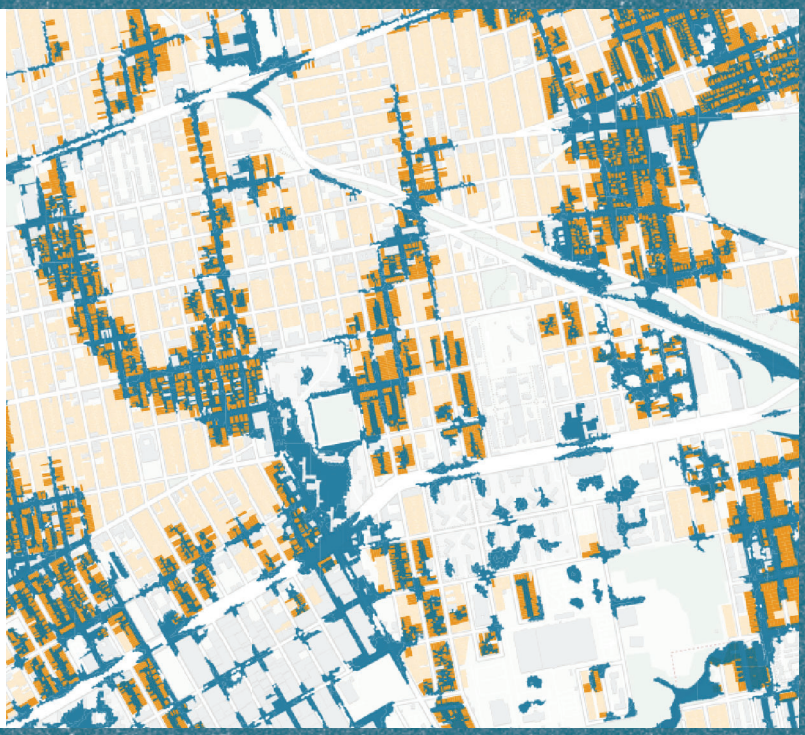

Figure 1: CHPC analysis of the scale and distribution of residential tax lots that would be impacted during an extreme rain event.

and should not be located within the coastal floodplain. Coastal properties will only become more vulnerable to flooding as global warming continues to drive sea-level rise.

Unlike coastal flooding, it is not proximity to a waterbody that governs a home's stormwater flood risk, but rather neighborhood topography, land use, soil conditions, and stormwater infrastructure among many other factors. Often referred to as "flash flooding" because of the speed at which they develop, stormwater floods occur in areas where heavy rainfall exceeds the ability of the ground and drainage system to absorb the stormwater. As the map in Figure 1 suggests, inland flooding impacts properties scattered across the city, showing that the issue is not endemic to a specific neighborhood or area. Unlike coastal flooding, a property's stormwater flood risk can increase or decrease over time, for example, if the city repairs roads and upgrades sewer lines or a homeowner regrades their yard.

The ubiquity of informal housing arrangements and the vulnerability of New Yorkers who rely on them make it difficult to estimate how many of the basements at risk for stormwater flooding currently have tenants. A prohibition on basement apartments may seem reasonable to some; however, this approach ignores the on-going housing shortage and affordability crisis that drive demand for these units in the first place. Further, a prohibition would deprive the city of an important housing typology and force units to remain in the gray market—further endangering their occupants' lives. Likewise, increasing enforcement and vacating units would deter homeowner and tenant engagement with the city and could cause displacement of vulnerable New Yorkers—many of whom would be added to the city's significant unhoused population.

Rather than make the regulatory framework that is partly responsible for discouraging the legalization of basement units more restrictive, the city should streamline a path to compliance, incentivize installation of essential safety features, and help residential properties with projected flood risk to meet a higher standard of storm safety.

In addition to realigning regulatory requirements to prioritize safety, the city must implement policies to manage stormwater runoff more actively and equitably. **Currently, the cost of stormwater flooding—polluted waterbodies, unsanitary living conditions, property loss, displacement, and death—is borne by a small number of New Yorkers, though stormwater runoff is generated by nearly all properties.** As climate change accelerates our vulnerability to sea-level rise and makes extreme rain events more common, there are actions that individuals, communities, and the city can embrace to both unburden the city's storm infrastructure and protect lives. This report explores possible interventions ranging in cost, complexity, and impact.

SUMMARY OF STORMWATER SAFETY AND EQUITY INTERVENTIONS

As climate change accelerates our vulnerability to sea level rise and makes extreme rains events more common, there are interventions at city, neighborhood, and lot level to both unburden the city's storm infrastructure and protect lives. Below are examples of possible interventions than range in cost, complexity, and impact.

CITY

C.1 Create a practical pathway to legalization. Relieve regulatory, process, and financial barriers to basement apartment legalization that are not required for safety.

C.2 Employ push-alerts. Clearly notify all New York City residents of the possibility of dangerous flooding and specific evacuation measures.

C.3 Require flash flood safety plans. Property owners and managers of rental units should provide tenants a flash flood safety plan detailing egress routes and identifying areas of refuge within a building at or above a safe elevation.

C.4 Impose a stormwater fee. Fees should better reflect a property's impact on the city's wastewater infrastructure.

NEIGHBORHOOD

N.1 Incentivize removal or replacement of paved areas. Permeable alternatives should be used to the extent possible on roads, sidewalks, driveways, patios, and walkways.

N.2 Revive and expand rain barrel giveaway programs. Encourage wide adoption of program through targeted outreach.

N.3 Prioritize targeted stormwater infrastructure. Green assets should be employed in areas identified to be at risk of inland flooding.

LOT

L.1 Ensure egress routes and window wells are code compliant and well maintained. Specially designed window wells could prevent or extend the period before water breeches the top of the well.

L.2 Install backwater valves in basements to prevent sewage from backing up into the house during a storm event.

L.3 Utilize flood sensors and alarms. Alert or awaken occupants when water infiltrates the basement to increase time for safe egress.

L.4 Emphasize effective bulk water control. Management of roof runoff, surface water, and ground water on a property is critical for protecting durability and health of occupants.

KEY ACRONYMS AND DEFINITIONS

CSO: Combined sewer overflow

DCP: NYC Department of City Planning

DEP: NYC Department of Environmental Protection

DOB: NYC Department of Buildings

DOF: NYC Department of Finance

EERO: Emergency escape and rescue opening

ERU: Equivalent runoff unit

FAR: Floor Area Ratio

FEMA: Federal Emergency Management Agency

GIGP: Green Infrastructure Grant Program

HPD: NYC Department of Housing Preservation & Development: Income-Restricted Housing Unit

NRDC: National Resources Defense Council

OEM: NYC Office of Emergency Management

SPWTS: Stormwater Permitting and Tracking System

USR: Unified Stormwater Rule

WEA: Wireless Emergency Alerts

CITY

IN BRIEF

The city must create a legalization program that combines regulatory and process reform with technical and financial support to bring basement units out of the informal market and ensure occupant safety. Implementing flood safety plans, push alerts, and equitable stormwater fees, can improve resiliency and public safety.

Recommendations

C.1 Create a practical pathway to legalization. Relieve regulatory, process, and financial barriers to basement apartment legalization that are not required for safety.

C.2 Employ push-alerts. Clearly notify all New York City residents of the possibility of dangerous flooding and specific evacuation measures.

C.3 Require flash flood safety plans. Property owners and managers of any rental units should provide a flash flood safety plan detailing egress routes and identifying areas of refuge within a building at or above a safe elevation.

C.4 Impose a stormwater fee. Fees should better reflect a property's impact on the city's wastewater infrastructure.

C.1 Practical pathway to legalization

Basement apartments have always been a vital component of the city's housing stock. As an accessory dwelling typology, they provide an affordable unit without public subsidy; they expand housing choice without significantly altering the physical character of the neighborhood; and they improve access to parts of the city that have historically excluded low-income New Yorkers. Some homeowners rely on the income from basement rental to cover basic household expenses or to age in place. Multigenerational households, recent immigrants, and low-income New Yorkers often depend on these units for inexpensive housing closer to their families, communities, or jobs. Nonetheless, facilitating basement conversions may be more important as a matter of safety than supply.[4]

Counterproductive Compliance

The legality of a basement apartment depends on its compliance with the city's Construction Codes, Housing Maintenance Code, Zoning Resolution, and the state's Multiple Dwelling Law. In principle, compliance with these regulations should unequivocally improve safety, yet actual outcomes are more complicated. The tension between safety and compliance stems from a basement legalization process that demands complete compliance with all applicable regulations, even those without a direct and meaningful impact on safety. For example, compliance in most parts of New York City requires the addition of a parking space with the creation of a basement unit. An extra parking space does not make the building occupants safer—in fact, it could make occupants less safe by increasing stormwater runoff. However, if the property cannot accommodate additional off-street parking, the homeowner can never legalize the basement unit. Even if it could comply with all other regulatory requirements, an informal basement apartment cannot be occupied or even legally retrofit with essential safety features simply because it cannot meet the parking requirement. In effect, the legalization process elevates parking over life-safety.

Many of the regulatory requirements that thwart the legalization of basement apartments do not have an appreciable impact on safety.

Chief among these requirements are unnecessarily restrictive ceiling height minimums, floor area ratio (FAR) caps, parking requirements, and the distinction between basements and cellars. (See the inset for more detail on each of these regulatory barriers.) These barriers to legalization are unrelated to basement safety and support policy goals that range from preferable to arbitrary. These regulatory requirements can directly preclude the legalization of basement units because of physical constraints that make it impossible to comply, and they can also indirectly prevent legalization because compliance is excessively resource intensive—construction cost, engineering and architectural design fees, legal services, and time investment needed to navigate multiple agencies. Beyond forcing viable units to exist in the gray market, insisting on compliance with these measures prevents owners from making improvements fundamental to the safety and habitability of existing basement apartments, for example, preventing legal installation of emergency escape and rescue windows. Full compliance, in this context, is counterproductive to occupant safety and needlessly constrains housing supply.

BARRIERS TO BASEMENT LEGALIZATION AND IMPACT ON SAFETY

Ceiling Height

Ceiling height preferences have evolved over time, reflecting changes in average human height, standardization of building material dimensions, heating and cooling methods and costs, sustainability concerns, and style. New York City's Building Code and New York State's Multiple Dwelling Law set minimum ceiling heights that vary depending on the type and age of a building. The 2014 Building Code requires that habitable rooms, like bedrooms and living rooms, provide a clear ceiling height of 8'-0."[5] The Building Code offers an exception allowing the basement in single-family homes to have a ceiling height of 7'-0", a detail that now applies to two-family homes by way of a 2022 code revision. The revision enables owners of single-family homes to convert their basement into a secondary apartment without meeting a higher required ceiling height. Unfortunately, when it comes to conversions, ceiling height relief is not extended to multiple dwellings. Multiple dwellings are defined as homes containing at least three units, including two-family homes seeking to convert to three-family homes. Both city (Building Code and Housing Maintenance Code) and state (Multiple Dwelling Law) regulations demand that the ceiling in an occupied basement of a multiple dwelling meet or exceed 8'-0".

A required ceiling height above 7'-0" is one of the most common regulatory barriers to converting a basement. For basements that fall short of the required ceiling height, excavation is often needed to obtain the additional height. However, excavation can expose the foundation and underground plumbing, undermine structural stability, and lower the finished floor elevation relative to the base flood elevation. These consequences also come at a high price; the premium associated with excavation can cost well over $100,000, making it financially infeasible to create a basement apartment for most homeowners.

The rationale for ceiling height requirements above 7'-0" is unclear, though ceiling height is often cited as a fire safety concern. CHPC commissioned the international engineering firm Thornton Tomasetti to investigate the impact of ceiling height on occupant fire safety. The study defined safety using three parameters: adiabatic surface temperature, oxygen concentration, and the time to flashover. The study considered a range of floor areas from the code minimum of 80-sf to a maximum of 300-sf in 20-sf increments. The ceiling heights considered ranged from a typical door height of 6'-8" to the general code requirement of 8'-0" in four-inch increments. Additionally, the study assessed open- and closed-door conditions and three different fire scenarios. The analysis shows that variation in ceiling height between 6'-8" and 8'-0" has a negligible impact on occupant fire safety during the period where temperature is within human tolerance.

Rather than reducing required ceiling height by several inches and ensuring that essential fire safety measures are met, many informal basement units remain occupied and unregulated.

In contrast, a reasonable path to legalization would ensure proper egress, electrical work, heating, and cooking facilities—all of which would substantially improve fire safety.

Distinction between basements and cellars

In casual conversation the terms "basement" and "cellar" are often used interchangeably. In fact, this report has referred to both subgrade types as "basements" for the purpose of clarity. However, New York City regulations distinguish between the two based on the percent (%) of the story height above curb level (or the base plane). A basement is a story with at least half of its floor-to-ceiling height above curb level, while a cellar is a story with less than half of its height above curb level. While not an important distinction colloquially, the legal use of a subgrade space depends on whether it is classified as a basement or cellar. For example, cellars in one- and two-family homes are not allowed to be rented or contain habitable space like a bedroom or dining room. To legally recategorize a cellar as a basement involves a land survey at very least and, more often, entails prohibitively expensive and invasive site work.

In practice, the distinction between basements and cellars is arbitrary. One inch can make the difference between having a basement or a cellar. An apartment's relationship to curb level or even the adjacent yard does not impact safety or habitability directly. If concerns driving this legal distinction are about egress and natural light, these factors could be regulated directly through window well requirements and light levels.

Floor Area Ratio (FAR)

The floor area ratio describes the relationship between floor area and the lot size. Since its introduction in New York City's 1961 Zoning Resolution, it has been one of the primary bulk metrics used to control building size. Each use in a zoning district is assigned a FAR that sets the maximum amount of buildable floor area on a given lot. Zoning regulations also establish what areas of a building do and do not count toward floor area. Functional space necessary for the operation of a building or in support of specific policy goals may be excluded from the FAR calculation. Exclusions can include cellars, bulkheads, uncovered steps, certain mechanical space, exterior wall thickness needed for high energy performance, parking, and refuse storage, for example.

If a homeowner attempts to convert a cellar or any space previously excluded from FAR into habitable area, it would be added to the property's floor area calculation. This newly included floor area may push the property above its zoned limit, since it is common for a property to be at or near its maximum permitted FAR. This threshold prevents the creation of an affordable rental unit on the basis that existing floor area within the building envelope now violates a bulk control. This outcome does not improve safety, nor does it improve or protect the character of a neighborhood.

Parking

New York City instituted off-street parking requirements for new development in 1950 as car ownership became increasingly commonplace.[6] Because the city's housing and infrastructure was largely built before widespread car ownership, congestion and competition for on-street parking grew with the alongside automobile use.[7] By the 1961 publication of New York City's amended Zoning Resolution, off-street parking minimums were established for residential, commercial, and manufacturing districts. In residential districts, the requirement is based on the ratio of parking spaces to dwelling units. While high-density residential areas have a low ratio of required parking, most of the city requires the addition of a parking space when a new dwelling unit is created.

Many modestly sized residential lots struggle to accommodate extra parking. This becomes an insurmountable barrier for those homeowners who want to create a legal basement apartment. In effect, the number of parking spaces controls the number of dwelling units that can be accommodated on a lot. The homeowner is left with two options: create an illegal unit outside of government oversight or forego creating the unit all together. The outcome is bad for the city either way—the private market creates less affordable housing, or a potentially unsafe unit is added to the gray market.

Legalization Is a Safety Tool

In some cases, homeowners do not realize that their basement unit is illegal or unsafe. In others, homeowners would like to legalize their units, but state and city regulations are too cumbersome, the cost of compliance too great, and the process too uncertain. Homeowners are reluctant to initiate an expensive process that draws considerable government scrutiny, especially when it may not result in the creation of a legal rentable unit. Tenants are unlikely to report informal units with potential safety issues for fear of eviction. Far from ensuring safety and habitability of the city's housing stock, the current basement legalization process reinforces a dynamic where units are created and remain within the gray market.

By streamlining the legalization process and alleviating compliance barriers counterproductive to safety, the city can reasonably expect homeowners to bring their basement apartments up to code. In doing so, the city can ensure that the units are equipped with essential safety features, like unobstructed egress routes and smoke detectors. It would also help the city identify basements that can never be safely occupied, even with retrofits. Encouraging legalization also creates opportunities to implement flood safety and resiliency programs, particularly important in areas prone to flash flooding.

For basements at risk of stormwater flooding, the city could incentivize the adoption of additional egress and bulk water control measures, including:

- A site survey documenting that the yard slopes away from the building footprint
- Re-grading the yard to slope away from the building footprint
- Roof drainage that discharges into a rain barrel or cistern
- Replacement of paved surfaces with a permeable alternative
- Flood sensor and alarm
- Installation of a backwater valve
- Specially designed window wells

The applicability of the stormwater flood measures listed above vary by property. For example, certain housing typologies, like rowhouses, are constrained by neighboring properties. These typologies make it ineffective, if not impossible to re-grade the yard in a manner that would improve stormwater resilience. In these cases, it is critical to educate homeowners on their potential flood risk and their responsibilities—sand bagging, clear egress routes, tenant checks—in advance of a flood event.

A practical path to legalization and policies that incentivize safety and habitability would encourage homeowners to bring their basement apartments into the formal housing market. Legalization would address imminent safety concerns, provide homeowners and tenants with leasehold rights, and reduce pressures that contribute to the proliferation of informal housing.

ELEMENTS OF A BASEMENT LEGALIZATION PROGRAM

To create a robust basement legalization program across the city, action is required by both New York City and New York State policymakers and must take a multipronged approach. Regulatory relief is central to legalization but, without financial assistance, even the best regulatory reform will leave lower income homeowners and their tenants behind.[8] Complicated technical and administrative requirements can deter homeowners concerned about the cost, duration, and outcome of the project. Removing the regulatory, process, technical, and financial barriers to basement apartment legalization will help ensure occupant safety, expand existing housing supply, and provide income opportunities for homeowners.

Regulatory relief

Legalization depends on a regulatory framework of essential safety and habitability standards for basement apartments. Some standards, such as minimum ceiling heights, FAR, and parking requirements, are not essential to the safety of the occupant. Instead, they create barriers limiting the willingness and ability of homeowners to recognize their basement units in an official capacity. Priority reforms include zoning changes to address FAR and parking, ceiling height relief for two- and three-family dwellings adding a subgrade apartment, and amendments to allow cellar occupancy.

Administrative process reform

The legalization process can be costly, long, and uncertain. Most applications submitted to DOB will require detailed attachments like calculations, plans, and design documents prepared by a registered professional. Administrative compliance can be labor-intensive and costly, even when the scope of physical work is small in scale. Concerns about government scrutiny beyond the scope of the basement conversion can also deter potential participants. Administrative barriers should not prevent participation in basement conversion.

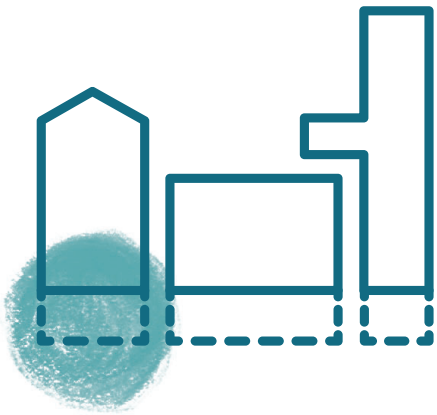

Technical support

The technical complexity of codes and regulations governing basement legalization makes it difficult for homeowners to know whether a successful basement conversion is possible prior to embarking on a potentially costly and demanding project. Homeowners who begin the process may eventually discover that they must appeal to the city for relief, necessitating additional professional expertise. Even if the basement is legalized, the homeowner may need help navigating the legal responsibilities of becoming a landlord. Access to affordable support from technical and program experts is especially necessary for lower income homeowners.

Financial support

Both the physical renovations needed to make an apartment code-compliant, and the demands of the administrative process can incur significant costs. The city and state can relieve financial barriers associated with legalization by alleviating unnecessary regulatory barriers, offering property tax abatements to offset any increase in value, rent support for the relocation of existing occupants, and low- or no-cost financing.

The regulatory and programmatic issues itemized in the following tables (pages 16 and 17) address one or more of the four necessary elements of a basement legalization program.

REGULATORY ISSUES	JURISDICTION	
	State	City
Allow cellar occupancy, which is currently prohibited in one- and two-family dwellings and highly restricted in multiple dwellings.	MDL	HMC
Allow at least one ADU per residential unit		ZR
Regulate glazed area in aggregate and remove 12-sf minimum window size in multiple dwellings	MDL	BC and HMC
Permit 7'-0" ceiling height in basement and cellar units in multiple dwellings	MDL	BC and HMC
Consider a two-family home that also has a basement apartment a private dwelling rather than a multiple dwelling. If not fully exempt from requirements of multiple dwellings, relieve specific requirements including: • Exempt from providing a minimum 30-ft of "adequate adjacent space" on the lot. • Relax individual window dimensions (12-sf) • Reduce the amount of story height required above curb level • Allow 7'-0" ceilings in basements and cellars • Exempt from roof scuttle and parapets • Exempt from providing a ventilating skylight	MDL	BC and HMC
Waive parking requirements for subgrade units		ZR
Exclude cellars from FAR calculation when converted into a dwelling unit		ZR
Exempt from federal accessibility requirements		BC *in compliance with federal regulations*
Issue a partial certificate of occupancy to reduce administrative burden and confine scope of review to the conversion.	MDL	AC
Limit sprinkler installation to the converted basement or cellar.	MDL	BC and FC
Prevent new or more restrictive requirements, for example: • More egress doors than currently required • Minimum or maximum square footage/area restrictions relative to primary residence • Prohibition of conversions in or near an area of projected stormwater flooding.	MDL	BC ZR BC

PROGRAMMATIC ISSUES	JURISDICTION	
	State	City
Create an amnesty program for work that had been done previously without a permit.	Legislation	Legislation
Abate property taxes to offset the tax increase due to conversion	Legislative amendment to RPTL	
Link funding to affordability requirements	HCR, Legislation	HPD, Legislation
Create and fund a technical services program where homeowners can access architects, lawyers, and construction experts to help guide them through the legalization process.	Legislation	Legislation
Provide a DOB point of contact		
Protect the rights of existing tenants. Protections could include: • Right of first refusal • Coverage of relocation costs • Maximum rent increase relative to pre-legalization	Legislation	Legislation
Expand financial options (Federal, State, City, Private): • Tied to a regulatory agreement • Low or no-cost loans • Allow future rental income to be considered in the underwriting of loan documents		

ABBR	LAW OR REGULATION	AMENDED BY
AC	NYC Administrative Code	Code Revision Cycle/ DOB, City Council
BC	NYC Building Code	Code Revision Cycle/ DOB, City Council
FC	NYC Fire Code	Code Revision Cycle/ DOB, City Council
HCR	NYS Division of Housing and Community Renewal	Division discretion or rulemaking
HMC	NYC Housing Maintenance Code	DOB, HPD, City Council
HPD	NYC Department of Housing Preservation and Community Development	Agency discretion or rulemaking
MDL	NYS Multiple Dwelling Law	State legislation
RPTL	NYS Real Property Tax Law	State legislation
ZR	NYC Zoning Resolution	ULURP and City Council

C.2 Emergency push alerts

After 11 New Yorkers died in apartments flooded by Hurricane Ida, the city committed to improving emergency communication with basement occupants. Since most basement apartments exist within the informal market, the city deployed canvassers to properly identify basement units and register the tenants and landlords with Notify NYC, the city's free emergency communications program.[9] The success of this basement "census" is unclear, but it is not surprising that the effort is still on-going nearly a year later. Informal apartments often serve marginalized groups who are difficult to contact.[10] The federal Census Bureau has written about the challenges of counting populations who may be reluctant or unable to engage with government because of factors like immigration status, housing insecurity, concern for safety, or a language barrier.[11] However, this degree of outreach precision is unnecessary and implies that flash floods are only a problem for basement tenants.

Flash flood warnings are important to all New Yorkers in an impacted area, allowing individuals to avoid travel, make egress plans, check on neighbors, and protect homes to the extent possible. Emergency alerts should be pushed to all phones based on the geography impacted by the storm, rather than the elevation of one's apartment. The Wireless Emergency Alerts (WEA) system allows national, state, or municipal authorities to target emergency messages to mobile devices within a geography with minimal overshoot.[12] Importantly, these alerts do not require individuals to register with the city. New York City must use WEA in addition to Notify NYC to reach as many affected residents as possible to provide clear and specific instructions.[13]

Alerts must clearly convey the risk and appropriate action to the reader. The National Weather Service and Notify NYC issue flood alerts with important information, but the potential danger and urgency of the emergency may not be obvious to many recipients. For example, a flash flood warning issued multiple times during Hurricane Ida by the National Weather Service and repeated by Notify NYC read:

"Hazards: Heavy rain of 1-2 inches per hour will cause flooding of urban areas, highways, streets, and underpasses as well as other poor drainage areas and low-lying spots. Preparedness Actions: Do not drive your car into areas where the water covers the roadway. The water depth may be too great to allow your car to cross safely. Move to higher ground. If you lose power and have a disability/ access needs, or use life sustaining equipment (LSE) and need immediate assistance, dial 911. Residential oil tanks in flooded basements may leak or rupture. If you suspect an oil spill in your home, call the NYSDEC Spill Hotline at (800) 457-7362. For more information on home heating oil spills, visit http://www.dec.ny.gov/chemical/8428.html#response or call 311. For the latest weather info: www.weather.gov/ox."[14]

Nothing in the distributed message clearly indicates that the conditions could be life-threatening or that basement occupants should prepare to evacuate. It should not be assumed that the rainfall rate itself communicates the danger of a flood event. Seemingly benign rainfall of 1-2 inches per hour is enough to create sheets of water over a modest 2,000-sf lot—enough to fill 60 bathtubs not including the additional runoff from neighboring streets, sidewalks, and parking. The "preparedness actions" listed in the sample warning also temper the sense of urgency by focusing on driving precautions, loss of power, and resources for home heating oil

spills, the only being useful once the resident is out of imminent danger. It was not until the National Weather Service issued a "flash flood emergency" at 11:30 pm that read, "This is a life-threatening situation. Move to higher ground if possible. Avoid unnecessary travel. If you must travel, avoid walking or driving through flood waters," an alert that unequivocally stated the threat. This was at least an hour after significant flooding was being reported across the city, including dramatic photos of inundated subway stations.[15]

A flood warning must be written with the understanding that the recipients have a range of backgrounds and circumstances that will affect how the message is interpreted. Additionally, residents will have different knowledge of the local area, may or may not have experience with a flood event, have varying levels of understanding of technical or local terms, and may be in different situations when the warning is received (e.g., home, work, car, visiting an unfamiliar area).[16] The message, "move to higher ground," may be too ambiguous given the range of possible circumstances to elicit a quick and appropriate response. The message could be made more effective by adding specificity about what action to take ("evacuate to a higher floor") and why ("rushing water can trap occupants inside a flooding basement").[17] Timely, concise, and clear alerts are critical during a deadly flood event.

The New York City Office of Emergency Management (OEM) must prioritize use of the WEA system to push early, clear, and actionable warnings to city residents in areas expecting flash flooding.

Following the lead of the National Weather Service, WEA push alerts should be limited to storm events where "considerable" or "catastrophic" flash flooding is predicted to avoid warning fatigue.[18] The messages must unambiguously state the risk and required action, sequencing messages by relevance to life safety. To the extent possible given WEA length restrictions, the push alerts should link to translations available in languages commonly spoken in the city, much like Notify NYC alerts that are available in 14 different languages including American Sign Language.

C.3 Flash flood safety plan

Warning systems and push alerts are most effective where people are already aware of their community's risk and what actions will improve their safety.[19] Despite campaigns from government agencies and non-profits, most Americans do not actually make and maintain household emergency preparedness plans.[20] In an on-going effort to improve preparedness, New York City mandates building owners distribute the NYC Apartment Building Emergency Preparedness Guide to all residents, circulate the Fire and Emergency Preparedness Annual Bulletin, and post a Fire Safety Notice of the inside of all apartment doors. Local Law 98 of 2013 also instructs the city to provide a list of recommended preparedness measures to property owners and requires the owners to temporarily post emergency information prior to an expected weather emergency, natural disaster, or extended utility outage. At the request of an organization, Office of Emergency Management (OEM) will deliver a Ready New York presentation that includes resources and tips on how to prepare for and respond to emergencies.[21]

Despite the volume of safety and preparedness material produced and required by the city, very little content surrounds safety precautions for flash flooding. The Apartment Building Emergency Preparedness Guide offers almost no guidance on preparation for a flash flood event. The brief section "Heavy Rain, Costal Storms and Hurricanes" focuses on preparations for evacuating designated hurricane zones and offers only two bullet points useful to basement occupants:

- Stay indoors. If you live in a basement apartment, be prepared to move to a higher floor during periods of heavy rain.
- If you are trapped inside by rising waters, move to a higher floor, but don't retreat into an enclosed attic unless you have a saw or other tool to cut a hole in the roof.[22]

These warnings omit important preparedness actions for both landlords and tenants, including cleaning and checking the operability of emergency escape rescue windows, and window wells, ensuring that basement tenants have clear unobstructed egress paths to a higher floor or refuge area, and deploying sandbags, quick dams, or flood bags around egress paths.

Beyond emergency postings and safety handouts, little is required of landlords to prepare for a flash flood event. Much like New York City's Fire Code requires property owners to prepare and disseminate fire safety plans and notices, the city should require all rental unit owners to create a flash flood safety plan. The plan would detail egress routes and identify areas of refuge within a building at a safe elevation.[23]

Mandating a flash flood safety plan will also help owners recognize their obligations to their tenants before and during a heavy rain event.

When an owner is renting out a unit at or below grade, the flash flood safety plan may include provisions for window well maintenance, deployment of sandbags or similar technology, installation and maintenance of flood sensors and alarms, or need for emergency release devices on interior stairwell doors, for example. The plan would also explicitly detail the responsibilities of each party regarding preparedness and maintenance. Importantly, a flash flood safety plan would help both landlord and tenant understand their flood risk and liabilities in advance of a potentially devastating storm.

C.4 More equitable share the cost of stormwater

When New Yorkers think about their demands on the city's water infrastructure, they usually think about their use of water when they cook, wash, and flush. The water left over after use, the wastewater, travels into the city's complex sewer system which leads to 14 wastewater resource recovery facilities. These facilities treat 1.3 billion gallons of wastewater every day. [24]

Property owners are charged water and sewer fees based on their potable water usage, generating funds to cover the system's operating and capital expenses. This fee structure seems to validate the way we think about the city's water infrastructure, but it omits a significant water source that nearly all properties generate—stormwater runoff.

The New York City Water Board is tasked with setting annual water and wastewater service rates for commercial and residential lots, but rates are not set for stormwater runoff. Currently, the water service fee is calculated by multiplying the rate set by the Water Board by the volume of water used. The wastewater fee is set as 159% of the water service charge.[25] Despite this simplified wastewater calculation, there is little relationship between potable water consumption and a property's demand on the city's sewer infrastructure. For example, a parking lot may not use any potable water, but generates a large volume of stormwater runoff that ends up in the city's sewer system or on neighboring property.[26] This fee structure does not reflect the true price of stormwater management—or rather, the lack of stormwater management—and indirectly forces a small number of New Yorkers to bear the cost.

With any rain, stormwater runoff carries pollutants like oil, bacteria, chemicals, and debris from impervious surfaces into our sewers and waterways. A heavy rain event can generate enough runoff to overwhelm the city's sewer capacity and cause significant flooding, property damage, household displacement, and the loss of lives. Property owners may not intuitively feel responsible for water that does not come out of their taps, but they *are* responsible for whether and how much stormwater leaves their property and ends up in the city's water infrastructure.

Currently, few New Yorkers pay for their stormwater burden on the city's sewers or use flood mitigation methods. The installation of runoff reduction measures on private land is largely voluntary except for new developments and redevelopments covered by the city's Unified Stormwater Rule (USR). A stormwater permit is required by USR when construction or redevelopment disturbs at least 20,000-sf of soil, adds at least 5,000-sf of new impervious surface, or a new connection is made to the city's sewer system.[27] While the USR lowered the threshold triggering a stormwater permit, it still only catches a portion of the development in New York City.

The USR amendments were finalized in February 2022. To get a sense of the number of properties that would be subject to the Stormwater Permit Program requirements under the lowered threshold, CHPC considered the roughly 398,000 construction projects approved by the Department of Buildings (DOB) within the most recent five-year period (2017-2021), and estimated which projects would have triggered the new USR requirements.[28] To capture sites that would have met the impervious area threshold, the analysis included exclusively horizontal enlargements and combined horizontal and vertical enlargements that could have added 5,000-sf of new impervious area. As a proxy for projects disturbing a soil area of at least 20,000-sf, the analysis encompassed all major construction applications for new buildings and

demolition on lots of at least 20,000-sf. It is unlikely that all projects that were included would trigger USR, making it a conservative estimate.[29] Based on this approximation, less than 1% of approved job applications would have triggered stormwater permitting over the five-year period.[30]

According to the Stormwater Permitting and Tracking System (SWPTS) developed by DEP, there are just 51 active Stormwater Construction Permits and 114 Post Construction Stormwater permits as of August 8, 2022.[31] Based on the extremely low volume of stormwater permits, the USR does not go far enough to mitigate the environmental impact of redevelopment and critically ignores the impact of existing buildings. Given that existing sites are not subject to stormwater management requirements unless redeveloped, an insufficient number of New York City's property owners are required to address their stormwater runoff contributions.

Meanwhile, hundreds of cities across the country have implemented a fee structure that accounts for the runoff generated by a property, its relative impact on the city's wastewater system, and contribution to local flooding. Most fee structures are based on an impervious area rate methodology since run runoff volume, rate, velocity, and pollutant load are all related to a lot's impervious area.[32] Alexandria, Virginia previously established a stormwater fee structure based on its property tax rate but found that it did not equitably represent stormwater impact on a lot-level. In 2017, Alexandria shifted to fees based on impervious area, which more equitably distributed individual charges.[33] In 2008, the Georgia Stormwater Utility Handbook recommended that counties adopt a fee structure based on an Equivalent Residential Unit or Equivalent Runoff Unit (ERU), that represents the average impervious surface area found on a class of properties. From there, Georgia performed a rate study to establish a fair rate for customers on a per ERU basis. The stormwater bill is then based on calculation of a lot's impervious area, divided by the ERU, and multiplied by the rate. If a locality is concerned about disproportionally high water quality impacts from a certain type of land use, it could impose a higher fee or surcharge on use types that have a more pollutants per unit area. Importantly, the guide notes that a credit system, which allows a property owner to reduce stormwater fees by implementing on-site stormwater mitigation, also improves fee equity.[34]

While introducing a stormwater fee can help to hold New Yorkers accountable for their impact on stormwater runoff, the fees must be distributed fairly to avoid exacerbating the housing affordability crisis.

A 2019 National Resource Defense Council (NRDC) study conducted with Valor Water Analytics found that roughly 100,000 properties with substantial runoff generation do not currently pay any wastewater fee, despite their burden on the city's infrastructure. Implementing a stormwater fee would increase the pool of properties contributing to utility revenue since all properties with impervious area are considered stormwater utility customers. For example, while unmetered properties in land use categories like Transportation & Utility and Vacant Land "currently account for a negligible share of total utility revenues, they would account for a significant share of stormwater revenue and a much larger share of total utility revenue under any stormwater fee scenario." A stormwater fee can also reduce costs for homeowners and owners of multi-family buildings in New York City by shifting costs to non-residential customers with larger, more highly impervious properties.[35] With over 40,000

acres of roads and sidewalks across the city, an important equity consideration lies in the decision to charge stormwater customers for public uses.[36] Unsurprisingly, NRDC found that single-family households could pay 20% more in stormwater fees if roadway stormwater costs were spread among all utility payers. Given that stormwater fee structures are also meant to incentivize adoption of green infrastructure on private land, it is counterintuitive to charge customers for runoff from land that they cannot improve.

DEP is in the process of analyzing equitable water and wastewater fee structures in response to New York City's high density, affordability, and sustainability goals. The Sustainable Rate Structure Study is set to be completed in August 2023.[37] New York City must acknowledge the cost of stormwater runoff by instituting an equitable stormwater utility fee. Ad hoc incentive programs alone do not encourage adoption of stormwater resiliency measures as quickly and broadly as needed to respond to the threat of extreme weather. We cannot continue to allow a small number of New Yorkers to pay the price for our collective inaction.

NEIGHBORHOOD

IN BRIEF

Inland flooding is a function of neighborhood-scale factors like impervious cover, drainage capacity, and local topography. Stormwater management practices should be adopted at a similar scale and prioritized in areas with the greatest risk of flooding.

Recommendations

N.1 Incentivize removal or replacement of paved areas. Permeable alternatives should be used to the extent possible on roads, sidewalks, driveways, patios, and walkways.

N.2 Revive and expand rain barrel giveaway programs. Encourage wide adoption of program through targeted outreach.

N.3 Prioritize targeted stormwater infrastructure. Green assets should be employed in areas identified to be at risk of inland flooding.

Emergency push alerts, mandatory flash flood preparedness, and stormwater utility fees are critical city-scale flood interventions. However, when inland stormwater flooding occurs, it is due to neighborhood-scale factors like impervious cover, drainage capacity, and local topography.[38] Reducing the risk of stormwater flooding will require community participation and neighborhood-wide strategies.

Voluntary green infrastructure programs should be designed with high levels of community participation as a principal goal. While each stormwater management installation is important, widespread program uptake makes appreciable reductions in flood risk possible. It may not reduce stormwater volume to an extent that eliminates flooding, but broad adoption of stormwater management practices can alleviate the impacts of flooding, increase the chance for safe egress, and provide ancillary community benefits including new green space, improved air and water quality, reduced heat island effects, enhanced biodiversity, and green job opportunities.[39] Programs successfully implemented across an urban catchment area can reduce the volume of stormwater runoff, limit damage from flood events, and delay flooding.[40]

Flash floods are dangerous in large part because the generate runoff at a shocking speed and even small amounts of surface runoff can have deadly consequences. According to the National Weather Service, just six inches of fast-moving flood water can knock a person off their feet, and two feet of flood water can carry away most vehicles.[41]

The force of surface water rushing into basements through windows, doors, and damaged walls can block egress routes, carry debris, and dislodge appliances injuring and trapping occupants.

Reducing impervious cover and installing green infrastructure across an urban catchment can slow stormwater accumulation, allowing more time for New Yorkers to understand the threat of flooding, to check on neighbors, and to escape unsafe areas.

Partnership is necessary to maximize efficacy of neighborhood-level stormwater programs. The city must engage with local organizations, community boards, and City Council representatives to increase program awareness and cultivate demand for green civic improvement projects. Philadelphia found success enabling third-party "bundlers," often design or construction professionals, to initiate green infrastructure projects with a portfolio of private property clients and apply for grants on behalf of the owners. This bundling allowed smaller properties to access funding that they would not otherwise be eligible for due to scale.[42] There are other economies of bundling that make the approach useful, but perhaps most importantly, it mobilizes property owners who would otherwise not participate. These public engagement efforts can improve uptake of green infrastructure programs, but participation still relies on an individual to act out of social responsibility rather than self-interest. Without a stormwater utility fee that internalizes the cost stormwater runoff, there is little economic incentive compelling homeowners to sustainably manage stormwater on their properties.

N.1 Removal of paved surfaces or replacement with permeable alternatives

Urban areas are vulnerable to flash flooding during heavy rains because buildings, streets, sidewalks, and parking areas prevent absorption of rain into the ground, increasing runoff 2 to 6 times above what would occur on undeveloped terrain.[43] Impervious surfaces cover more than 70% of New York City, creating runoff that can easily overwhelm the city's outdated combined sewer infrastructure and dangerously collect in low-lying areas like basements and subway stations.[44]

Stormwater flooding is a sporadic, but dangerous consequence of New York City's impervious cover. However, paved surfaces have a constant and less conspicuous impact on environmental and physical health. Increased impervious coverage leads to poorer rainwater infiltration, depletion of groundwater reserves, larger runoff volumes, and pollution of soil and waterways. As stormwater runs across impervious surfaces, it carries contaminants including bacteria, pesticides, grease, and solid waste into the sewer and local water bodies. Heavy metals, microorganisms, and other toxins commonly found in urban stormwater can lead to acute illness from recreational contact or consumption of tainted seafood.[45] Impervious surfaces also raise the temperature of runoff and the receiving waterways, further disrupting local water ecology.[46]

Removal of impervious surfaces or replacement with permeable alternatives is a simple and effective way to help mitigate inland flooding, improve water and air quality, and reduce the heat island effect. Permeable pavement is a porous surfacing material that allows water to pass through, catching precipitation, and holding a certain volume while the water slowly infiltrates the ground below. There are various types of permeable pavement including porous asphalt, pervious concrete, and permeable interlocking concrete pavers. All permeable or open-joint surfacing options consist of a load-bearing porous top layer typically set above a stone bed that acts like a reservoir holding water before it infiltrates the soil below. While permeable pavements can substitute for traditional impervious surfaces in most cases, some applications that involve heavier loads, higher degrees of surface abrasion, or have maintenance constraints may be inappropriate.[47]

(Above) 1 – permeable pavers, 2 – grass pavers, 2 – pervious concrete, 4 – porous asphalt. Image credit: Stormwater Partners via stormwaterpartners.com/facilities-permeable-pavers

The efficacy of permeable pavement as a stormwater management tool depends on design—elevation relative to the seasonal high water groundwater table or bedrock, infiltration rate of underlying soil, whether a reservoir layer or underdrain is provided—and maintenance. Sediment controls and occasional vacuuming help prevent clogging of the surface.[48] Using a regenerative air vacuum sweeper is considered a best practice for hydrologic performance of permeable surfaces.[49] Ride-on and walk-behind models appropriate for maintenance on private residential lots are likely too expensive for an average homeowner. The city could offer community sweeping programs or make them available by service request to 311.

While maintenance is a commonly cited concern, porous asphalt and concrete generally require less maintenance for cracks and potholes than traditional road surfacing methods. This advantage stems from efficient subsurface drainage and the ability to better withstand freeze-thaw cycles and temperature extremes. The inherent ability to drain surface water also reduces the frequency of ponding and black ice, requiring significantly less deicing salt in the wintertime. In summer, pervious pavements have the benefit of reducing urban heat-island effects. As water, air, and vapor pass through the voids, moisture within the permeable surface evaporates, drawing heat out of the pavement.[50]

The NYC Department of Transportation (DOT) currently uses porous asphalt in select roadway locations and considers these pilot uses under Local Law 80 of 2013, which mandated a study of permeable roadway and sidewalk materials.[51] The Department of Environmental Protection (DEP) has also included porous asphalt installations within the public right-of-way and in a handful of large areawide contracts as part of its Green Infrastructure plan. Through these efforts, DEP has found that permeable pavement in the right-of-way "has the potential to capture large volumes of stormwater."[52] The city's Green Infrastructure Plan is laudable and ambitious, but it does not go far enough to encourage stormwater management on the majority of private properties across the city.

DEP offers a few financial incentives to private property owners for implementation of green stormwater management practices. The Green Infrastructure Grant Program (GIGP) provides funding for green roof retrofits that are at least 5,000-sf.[53] Property owners may also take advantage of a one-time-only Green Roof Tax Abatement (GRTA) for the installation of a green roof on at least 50% of their roof.[54] The Resilient NYC Partners program exists for stormwater retrofits on properties over 50,000-sf and the state Environmental Facilities Corporation sponsors the Green Innovation Grant Program, providing competitive awards to larger infrastructure projects across the state.[55]

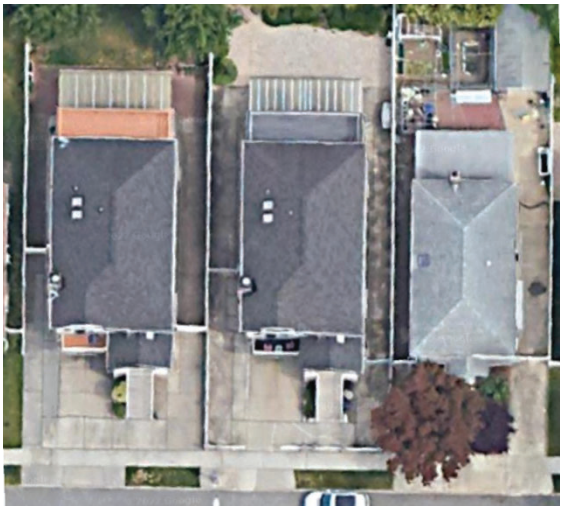

(Above) Aerial view of three lots in a NYC neighborhood hard hit by Ida. Close to 100% of these lots are covered by impervious surfaces. At least one property housed an informal basement apartment. Credit: Google Maps

The strategy behind these incentives is to defray the cost of construction on larger projects. Unfortunately, more than 80% of private residential lots are under 5,000-sf, preventing a sizable number of property owners from accessing green incentives.[56]

The most devastating consequences of stormwater flooding occur in residential areas where surface runoff comes from neighboring properties and roads. Alarmingly, the city still prioritizes off-street accessory parking in these neighborhoods, adding considerably to the volume of stormwater runoff.

The Zoning Resolution currently allows permeable paving for off-street parking where the Buildings Commissioner "determines that such materials are appropriate."[57] Rather than merely allowing permeable pavement in certain circumstances, permeable surfacing options like porous asphalt, pervious concrete, porous pavers, and grid pavement should be permissible as-of-right or required.

Updated zoning and design guidelines should be coupled with incentive programs that encourage wide participation. Cities across the country including Palo Alto, San Diego, Milwaukee, and Philadelphia are providing technical assistance, rebates, grants, and other credits to residential property owners who reduce impervious area on their lots.[58] Philadelphia's Rain Check program helps property owners connect to preapproved subcontractors who install free or deeply subsidized stormwater management features including rain barrels, rain gardens, downspout planters, and permeable pavers (see below).[59] New York City could similarly subsidize upgrades or offer a rebate to property owners who reduce their impervious area or add stormwater management features. Rather than require new parking, the city could incentivize the replacement of existing driveways and parking areas with permeable materials.

At scale, permeable pavement reduces peak flood volume, slows runoff, improves air and water quality, relieves the city's sewer system, reduces heat-related fatalities, and enhances neighborhood quality.[60]

Perhaps most important to basement occupants, removing impervious area or replacing it with permeable alternatives broadly across an urban catchment can delay the worst of the flooding and provide additional time for safe evacuation.

N.2 Rain barrel giveaway

Rain barrel systems, which cost around $150, are small low-maintenance cisterns that homeowners can easily install above grade. By connecting directly to the property's downspout or gutter, the barrels can collect and store about 40-60 gallons of roof runoff for later use. According to the EPA, rain barrels conserve an average of 1,300 gallons of water per year. Using harvested rainwater instead of tap water for irrigating yards and gardens also allows property owners to reduce their water service bills. The DC Urban Gardeners conducted a national study and found that during the summer months, rain barrel customers saved on average $35 per month on their water bills.

In 2008, New York City's Department of Environmental Protection (DEP) kicked off a Rain Barrel Giveaway program to reduce water demand and relieve the burden on its combined sewer system. Initially, the program awarded 250 barrels

(Above) A backyard green retrofit done through Philadelphia's Rain Check program. The yard features a rain barrel, rain garden, and permeable pavers.

to homeowners in Queens. After an overwhelmingly positive response, another 750 to homeowners citywide received rain barrels the following year. A 2011 press release publicized the distribution of 1,000 free rain barrels to owners of one- and two-family homes across the Bronx, Brooklyn, Queens and Staten Island. The same press release projected that the city could reduce its sewer management costs by $2.4 billion over 20 years by using green stormwater management practices.[61]

At its 2016 peak, DEP's rain barrel program distributed over 11,000 barrels, doubling the previous year's effort.[62] Data about past distributions and dates of upcoming distributions are unavailable apart from an occasional press release. RainBarrelFundraising.com and RainBarrel.ca provide rain barrel purchase and delivery information as well as updates about New York City's distribution efforts. On the site, homeowners are encouraged to join the rain barrel waitlist to be notified about upcoming rain barrel dispensation. Recent rain barrel distribution efforts appear to consist of events cosponsored by DEP and a local nonprofit or official from the New York State Assembly, Senate, or New York City Council.[63]

While individual elected officials occasionally promote rain barrel giveaways in their districts, there is no way for an individual property owner to request a free rain barrel.[64] Residents who are seeking information about obtaining a free rain barrel are instead encouraged to reach out to the office of their local elected officials directly.[65] In the NYC Green Infrastructure 2021 Annual Report, DEP reported progress in creating a Community Stormwater Resiliency Grant Program to merge private incentives and right-of-way initiatives to engage residents, community groups, and small businesses in stormwater resiliency efforts. This community-oriented program could provide the opportunity and funding to revive and expand rain barrel distribution efforts.[66]

(Above) Rain barrel provide by Philadelphia's Rain Check program. The harvested water can be used to irrigate vegetation, cleaning, and other non-potable uses. Image credit: The Philadelphia Water Department at www.pwdraincheck.org/en/stormwater-tools/rain-barrels

Despite abundant comments on public forums requesting barrels or additional information, DEP has not reported plans to expand rain barrel distribution on a broader scale. Other US Cities, such as Washington, D.C., San Antonio, TX and San Jose, CA have implemented rebates and grant programs that maximize savings for property owners who pursue rainwater harvesting. In Washington, D.C., the Riversmart Homes program provides rebates in the form of $2 per gallon (with a maximum of $1,000) to individuals who install their own barrels and meet all requirements. Homeowners pay a one-time fee of $50-$70, a city-subsidized cost to cover barrel and contractor installation. Upon installation, the individual homeowner maintains maintenance responsibility.[67]

The city, in partnership with neighborhood associations, should revive and expand the rain barrel giveaway program to encourage wide adoption. Like other green stormwater interventions, broad uptake of rain barrels and cisterns could make a material impact in neighborhood flood safety by reducing stormwater volume and delaying peak runoff. A study of a Bangladeshi city

(Above) A give-away event sponsored by a City Council Member in East Elmhurst. New York City rain barrel give-away events. Image credit: DEP/NYC Water via Flickr.

subject to monsoon flooding found that rainwater harvesting used at scale could reduce the extent of a flood by roughly 28%.[68] Following a severe weather event, the city could target distributions in impacted neighborhoods, as property owners may be more responsive to community stormwater interventions when the consequences of a storm are still apparent.

N.3 Targeted stormwater infrastructure improvements

Neighborhood interventions are important for climate equity. Lower-income populations tend to live in urban areas and informal circumstances that make them more vulnerable to climate risk. Communities that have been disproportionately impacted by Hurricane Sandy, Hurricane Ida, or Hurricane Henri have demonstrated vulnerability that deserves prompt, targeted relief.[69] While the most effective remedy likely lies in doubling the capacity of the New York City sewer system to absorb 3.5 inches of rain per hour, a long-term effort that carries a hefty $100 billion price tag, the city must urgently invest in smaller-scale programs targeting at-risk areas.[70] DEP has begun identifying and allocating funding to flood-prone areas in need of major sewer upgrades, such as storm sewer and catch basin projects in Westerleigh, Staten Island. However, beyond the successful completion of upgrades in Southeast Queens, the city is years away from more comprehensive replacement, leaving low-income communities vulnerable in the meantime.[71]

(Right) The distribution of green roofs across New York City. Image Credit: Treglia, Michael L., McPhearson, Timon, Sanderson, Eric W., Yetman, Greg, & Maxwell, Emily Nobel. (2018) via Urban Systems Lab – Data Visualization Hub nyc.urbansystemslab.com

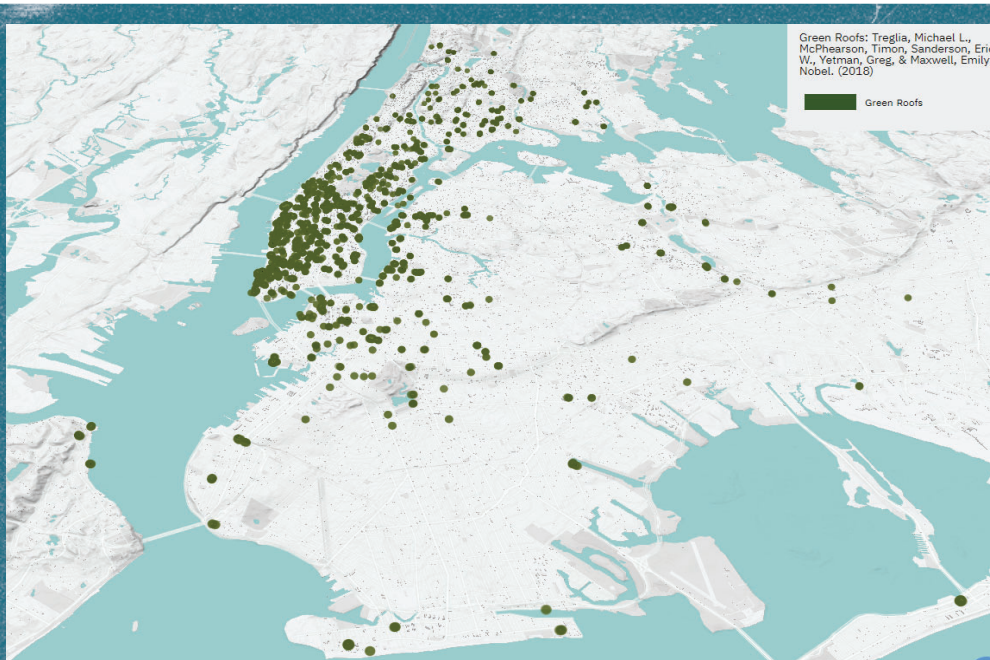

According to the NYC Green Infrastructure Plan 2021 Annual Report, the city has completed or is working on 11,000 green infrastructure projects across the 5 boroughs—including 4,000 rain gardens and bioswales, 70 bluebelts, installation of permeable pavement, a Cloudburst Resiliency Planning Study based on effective stormwater management in Copenhagen, and subsequent cloudburst management projects in flood-prone neighborhoods in Southeast Queens.[72] Additionally, a 2010 DEP pilot project tested the use of blue and green technologies on schools and municipal rooftops to divert stormwater from combined and municipal sewer systems. The study, which determined that green roofs collect 60% of runoff that would otherwise enter the sewer system, shows that green remediation measures can, if allocated properly to flood-prone areas, materially reduce stormwater flooding.[73]

However, while DEP maintains a laudable list of green assets and programs under development, assets are not evenly distributed across the city. While the Green Infrastructure Grant Program (GIGP) incentivizes green roof retrofits, green roofs are still largely concentrated in Manhattan, specifically in Midtown, a neighborhood that has not historically grappled with severe flooding.[74] Since the GIGP launched in 2011, it has committed $14 million dollars to 34 private property owners, according to the 2021 Green Infrastructure Annual Report.[75] Far from ensuring that stormwater infrastructure is widely and equitably distributed, ten years of GIGP incentives have only reached a few dozen properties. In terms of the availability of natural water absorption, New York City is made up of 39% green spaces, most of which are clustered in northern Bronx and Manhattan's Central Park.[76] Hurricane Ida proved that a lack of natural drainage leaves the Brooklyn and Eastern Queens neighborhoods particularly vulnerable.

As for the neighborhoods receiving green assets under the Green Infrastructure Plan, the Center for an Urban Future (CUF) found that just 20% of programs initiated since 2016 were completed.[77] According to CUF's report: "60 percent of green infrastructure assets under construction (3,455 assets) are in Queens and 31 percent (1,794) are in Brooklyn. Just 9 percent (547) are in the Bronx. Only 3 assets are under construction in Manhattan, and none in Staten Island." The city will need to increase its efforts throughout the city, with special attention to environmental justice areas. As for completed initiatives, many have not reached their intended impact. A 2019 audit conducted by New York City Office of the Comptroller revealed poor quality and maintenance of the majority of 102 rain gardens inserted in neighborhoods throughout Queens, the Bronx, and Brooklyn—a project that cost the city over $4 million.[78]

In March 2022, the city announced the completion of 5,535 feet of new storm sewers and 55 catch basins as part of a $50 million DEP targeted resiliency project in Rochdale Village, Queens.[79] The 2018 program was part of an effort spearheaded by former Mayor Bill de Blasio administration's $2.5 billion investment in drainage improvement projects throughout Southeast Queens, including Hollis and Queens Village—areas plagued by decades of extreme flooding due to disinvestment and naturally high water tables.[80] Targeted green infrastructure programs, such as recent sewer replacements and drainage upgrades in Southeast Queens, reflect effective use of city investment to address flood threats in neighborhoods with highest risk of resident injury or death, displacement, and structural damage.

LOT

IN BRIEF

Proper design and maintenance of egress routes, alarms, and bulk water systems can increase time for safe evacuation during an emergency and improve indoor air quality and habitability for basement occupants.

Recommendations

L.1 Ensure egress routes and window wells are code compliant and well maintained. Specially designed window wells could prevent or extend the period before water breeches the top of the well

L.2 Install backwater valves in basements to prevent sewage from backing up into residences during storm events.

L.3 Utilize flood sensors and alarms. Alert or awaken occupants when water infiltrates the basement to increase time for safe egress.

L.4 Emphasize effective bulk water control. Management of roof runoff, surface water, and ground water on a property is critical for protecting durability and health of occupants.

Climate change has made hurricanes and extreme rain events increasingly common. The 100-year storm, a storm event that has the probability of happening once every 100 years, is now likely to occur almost twice as often.[81] Sea level rise makes New York City's 520 miles of coastline vulnerable to flooding and extensive storm damage. The threat of climate change has become more salient for many New Yorkers, as many know someone or were personally affected by an extreme weather event. Households that have experienced basement flooding are likely to carry a fear of recurrence for years, as they have faced the financial, health, and safety impacts of a severe storm.[82] These households are also likely to be among the most receptive to adopting stormwater management best practices and installing safety features that would directly protect family, friends, or tenants living together on the lot.

The need for a practical pathway allowing homeowners to bring their basements into safe and legal use cannot be overstated. It is the prerequisite to all other flood safety improvements.

Property owners who would like to install egress windows or regrade their yards must apply for permits but cannot and will not if there is no reasonable path to legalization. The following interventions can help protect households from flooding, but for homeowners to implement them, the city must provide a clear path for legalizing a basement unit.

L.1 Egress routes and window wells

Egress routes are omnipresent in our lives. School children practice filing out of their classrooms, fire escapes are a visual shorthand for life in New York, and flight attendants point out exits and brief passengers on use of inflatable slides. The ubiquity of egress routes and the importance we place on them should indicate how essential they are to our safety. Yet, when it comes where we live, we often fail to identify our egress routes until we are urgently searching for them.

All buildings must be designed so that exits are available and can always be reached. The city's building and fire codes prescribe how many exits must be available, how they are arranged, the dimensions of the paths and the exits themselves, and many more specifications, such as the direction of the door swing. It is easy for a renter to assume that the apartment they are considering is up to code, but this may not be the case—particularly for apartments in the informal market.

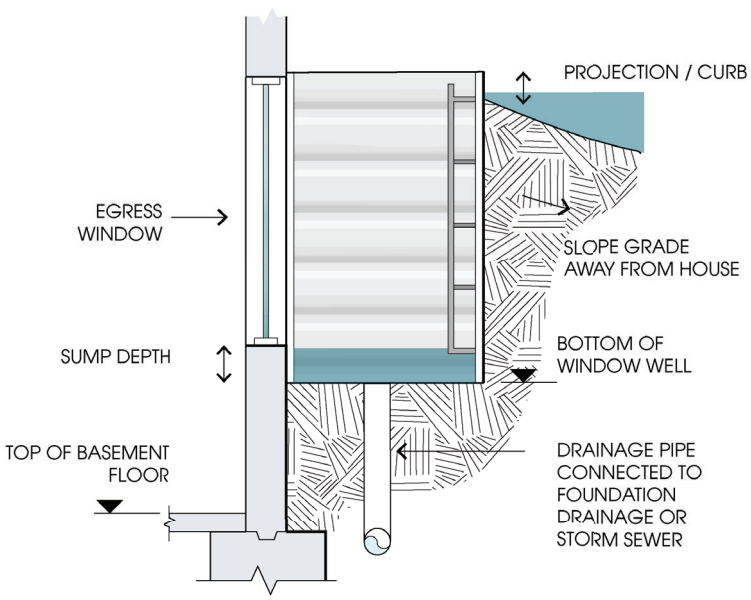

(Right) Schematic of a window well preventing water inundation. Image credit: K. Leitch, CHPC

Low-income renters with little housing choice may not feel entitled to ask the landlord questions about the safety of the unit, even if they suspect that there is a problem.

This underscores the importance of bringing basement units into legal use so the government can ensure that fundamental safety features, like egress and flood-resistant wall assemblies, are provided.

An essential step toward improved safety in basement apartments, whether the risk is from flood or fire, is ensuring that occupants have access to reliable, unobstructed, and code-compliant egress. Basement apartments must have an exit door opening directly to the outdoors. Critically, egress routes cannot rely on the landlord or another tenant unlocking or opening a door. Many basement spaces have an interior stair connecting the primary dwelling to the basement. Often, the door locks from both sides to give both households privacy and security; however, this arrangement can be deadly if the basement tenant is relying on the interior stair to find higher ground during a flood.

Additionally, every "sleeping room" in a basement must be equipped with an emergency escape and rescue opening (EERO), typically a window that meets minimum dimensions and operability standards to ensure that occupants and first responders may easily pass in and out during an emergency. These escape windows must be easily accessible, where the sill is no more than 36 inches above the floor, and open to the yard or code-compliant window well.[83] The window well is an exterior alcove at least 9-sf in area, the bottom of which is typically several inches below the sill a sump to catch water before it runs into the basement. The sump is often fitted with a drain and/or pump to prevent water from accumulating. Depending on its height, the wall of the window well must be equipped with a permanent ladder or stepped cladding to facilitate escape. Like smoke detectors, dryer vents, air conditioning units, and myriad other aspects of a home, sump drains, window well covers, and egress ladders must be properly maintained to assure safe operation.

While most egress is designed with fire emergencies in mind, window wells could be modified to better address flooding. The wall of a window well could project higher above the adjacent yard to account for ponding and water accumulation. While an extreme rain event could still breech the extended edge of a window well, it would still buy more time for emergency egress from a basement. For the same reason, landlords should sandbag around exits when a serious storm is forecasted to increase the length of time an egress route is accessible before water overcomes the window or door.

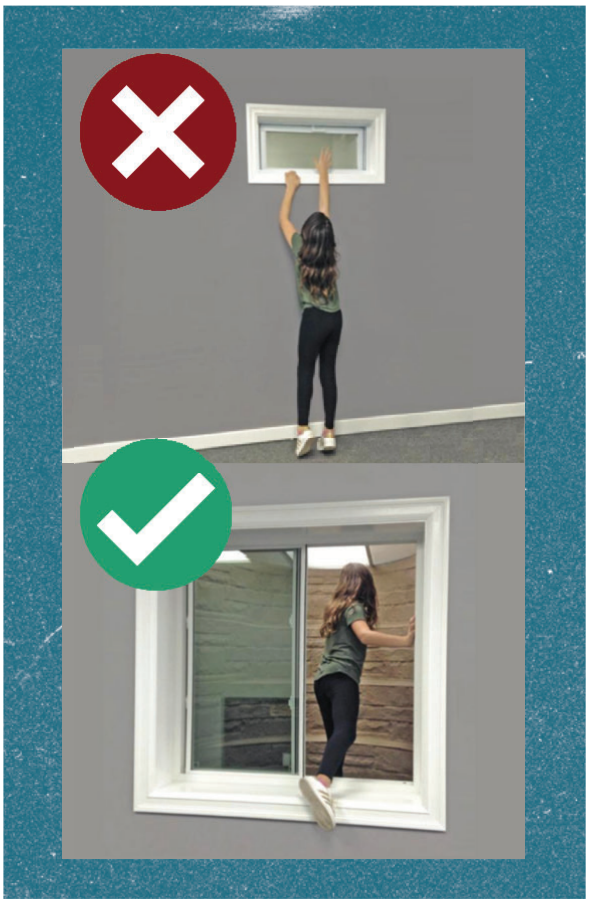

L.2 Backwater valve

New York City, like many older American cities, relies to a large extent on a combined sewer system. Roughly 60% of the city's sewer infrastructure uses a single pipe to carry both wastewater and stormwater to the city's treatment facilities.[84] During heavy rains, the combined systems can become overwhelmed and release untreated sewage into local bodies of water. During Hurricane Sandy, more than 5.1 billion gallons of sewage overflowed from New York's pump stations and treatment plants.[85] This combined sewer overflow (CSO) can occur at any point in the city's sewer system, including pump stations, treatment plants, and manholes.

Stormwater can flood into homes from multiple paths, such as windows, doors, cracks in the foundation, or a backed-up sanitary sewer system.

Most stormwater runoff carries pollutants, but a backed-up sewer presents significant health risks to the building occupants. Untreated sewage can carry bacteria, viruses, and microorganisms that can cause serious illness. Unless properly treated, rugs, furniture, walls, and the floor can remain damp, allowing dangerous mold to grow.[86]

Residential sewer backups are common through basement toilets, shower drains, sinks, and floor drains. Installing a backwater valve where a building connects to the municipal sewer can prevent wastewater from backing up into a basement. Inside the valve is a flap that closes if water or sewage starts to flow backward toward the house allowing only one-direction flow. While the mechanical device is simple in concept and quick to install, retrofitting an existing sewer line with a backwater valve can cost between $500 and $5,000, and requires engaging a licensed plumber.[87]

(Right) Simple mechanics of a backwater valve. Credit: Adapted from SquareOne, www.squareone.ca/resource-centres/getting-to-know-your-home/backwater-valve

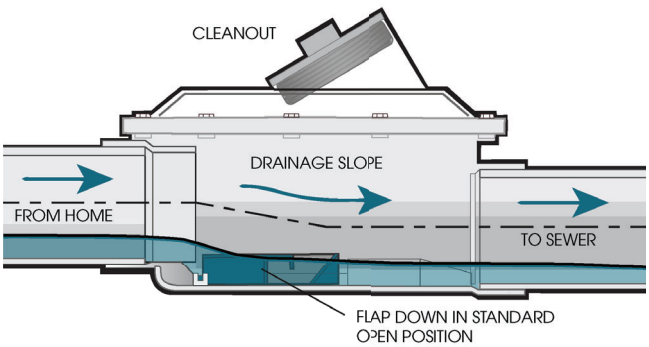

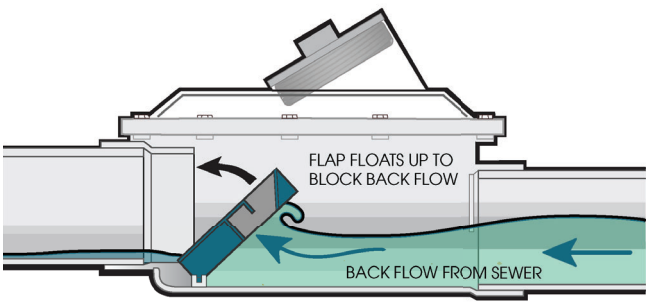

(Left) Top, a child reaches for the sill of a small hopper window common in basements and cellars. The window dimensions are too small to accommodate egress passage, it partially opens from a bottom hinge obstructing the opening, and the sill is too high for an occupant to climb out. Bottom, the child easily passes through a clear opening that meets egress dimensions into a code-compliant window well with a built-in ladder. Image credit: Egress Pros via egresspros.com.

Cities like Washington D.C. and Toronto have offered rebates to encourage homeowners install these simple mechanical devices. In 2018, the New York State Governor's Office of Storm Recovery expanded its two-year old Home Resiliency Audit Program to cover more homes and provide free backwater valves to qualifying low-income homeowners.[88] Unfortunately, the neighborhoods eligible to participate in the program are limited to a handful along the southern coast of each borough. The homes eligible for a free backwater valve should be extended to include homes that have previously experienced flooding or are at risk for flooding according to the city's projected stormwater flood maps.

Following Hurricane Henri in 2021, Brooklyn Council Member Justin Brannan advocated for the city to cover the cost of backwater valves for homeowners with basements at risk of flooding.[89] Whether the city or state takes leadership of this issue, funding should be provided to cover the cost of installation in all low-income households with flood vulnerability.

L.3 Flood sensor and alarm

On September 1, 2021, 911 calls for emergency assistance due to the disastrous effects of Hurricane Ida started to climb rapidly at 8pm.[90] Between 8:51pm and 9:51pm, Central Park received 3.51 inches of rain—the largest volume of rainfall to ever hit the park within a single hour.[91] At 11:26pm, former NYC Mayor Bill de Blasio declared a state of emergency due to extreme flooding. These unprecedented events occurred after many New Yorkers had already turned in for the night.

Much like the mandate that all homes be equipped with a smoke detector, below-grade apartments must have flood sensor and alarm that can alert or awaken occupants in the event of a flood.

By sounding alarms upon water detection, flood sensors can awaken inhabitants to increase the amount of time individuals may safely exit by way of established egress or exits on higher floors. For the 13 people who lost their lives to Hurricane Ida in NYC, especially for the 11 New Yorkers residing in basement apartments, flood alarms may have increased chances of survival.

Alongside flood-induced injury and damage prevention, water sensors also mitigate negative health outcomes caused by water leaks. Mold infestations caused by moisture produced by just 1 inch of water can lead to respiratory problems—especially for those with pre-existing conditions that affect immunity. Aside from the health externalities, mold infestations are extremely costly to treat, ranging from $500 to $4000 depending on the severity according to Skilling & Sons.[92]

L.4 Bulk water control

Even outside a severe rain event, basement water infiltration can create mold, poor indoor air quality, and damage belongings. Bulk water control—the management of roof runoff, surface ponding, and ground water on a property—is critical for building durability and the health of occupants.[93] New construction should be designed and built including best practices in bulk water control, but retrofits are common when a moisture problem has been identified or a homeowner is upgrading the building envelope.

Often the largest source of impervious area on a residential lot, the roof design is a vital component of managing stormwater runoff. Rainwater landing on a roof can be held temporarily or harvested for later use using stormwater management systems such as blue or green roof technology, rain barrels, or cisterns. Most roofs are designed to shed water away by gravity, either gently sloping a "flat" roof toward a drain or allowing water to sheet down more steeply pitched sides. Typically, large flat roofs channel water into an internal drain that is ultimately connected to a stormwater discharge system or municipal storm sewer line. For most other roofs, the water sheds off the roof eaves onto the ground. Rain flowing off the roof eaves should be collected into properly sized gutters and a downspout system. The downspout itself should be extended to discharge far enough away from the foundation walls so that the collected water does not saturate the soil around the basement walls.

For the same reason, finished grade should slope away from a home's foundation. Stormwater that overflows roof gutters because of poor maintenance or a heavy rain can also spill onto the ground and pool near the exterior walls. If water collecting near the building perimeter is a habitual problem, it can be addressed using several techniques including localized impermeable soil caps, small surface drainage swales, and an impermeable "skirt" below the top layer of soil.[94] Small surface drainage swales can also be used to control and redirect surface water coming in from adjacent land. Unfortunately, stormwater tributary areas often extend beyond property lines and beyond individual control of the homeowner. A property owner interested in improving bulk water management should consult with a registered design professional to assess the foundation conditions and site characteristics to find the most appropriate and effective solution.

(Below) The following diagram shows the basic requirements of bulk water control. Image credit: Adapted from the Building Science Corporation via BA-1015 found at https://www.buildingscience.com/documents/bareports/ba-1015-bulk-water-control-methods-for-foundations/view

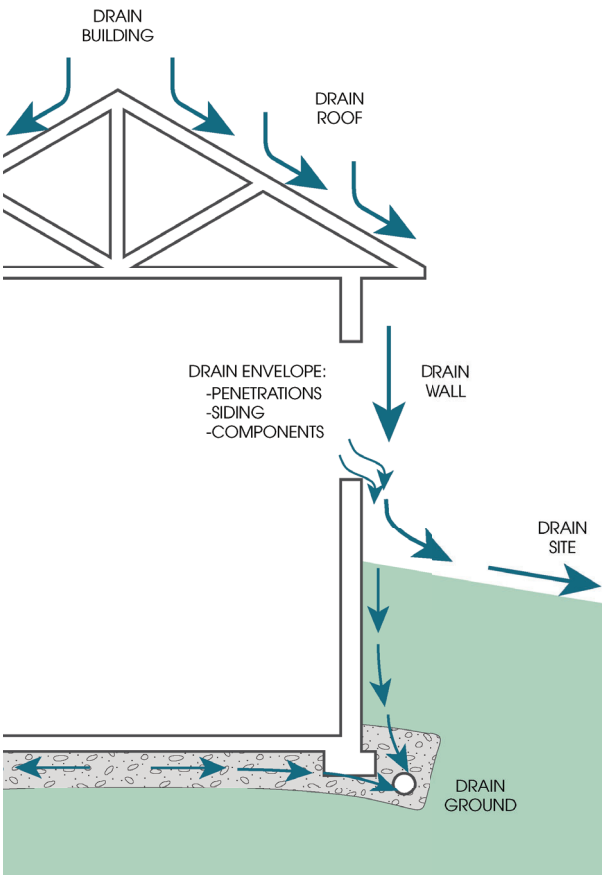

CONCLUSION

New York City must confront the fact that unregulated basement apartments signify a pressing health and safety crisis happening in tandem with the city's affordable housing shortage—dual crises that disproportionately impact low-income homeowners and tenants. While a basement legalization program is a necessary step towards fully protecting New Yorkers from extreme weather events, it also requires addressing the systemic inequity that has led to housing and climate vulnerability. Social, economic, and political forces influence how New Yorkers experience climate disasters, like inland flooding from extreme rain. Poor housing quality, land prone to environmental hazards, and economic disadvantage are products of historic inequity, such as redlining and lending discrimination, that work together to increase vulnerability to climate disasters and limit capacity to cope with and recover from their impacts.[95]

To bring basement units into the formal housing market, the city must streamline the path to compliance, reduce regulatory barriers, and distribute the costs and consequences associated with extreme rain and flooding more equitably. Additionally, in acknowledgment of the urgency of growing climate threats, the city must also focus its resources on the most vulnerable areas and ensure that incentive programs are designed to reach the communities that will benefit the most. While the measures articulated in this report are not exhaustive, they provide critical next steps to promote safety in the short and long-term. The consequences of climate change will only be reduced if government officials and agencies, neighborhood leaders, and individual residents act together to protect each other and our city.

ENDNOTES

1. As measured in Central Park between 9 pm and 10 pm according to NRDC climatologist Samantha Borisoff. Friedlander, Blaine. "Ida's Remnants Struck Idling Front for Historic Deluge." Cornell Chronicle, Cornell University, 8 Sept. 2021.

2. These statistics are based on a CHPC analysis of current FEMA flood Flood Insurance Rate Maps (FIRMs), PLUTO21v1 lot data, and the NYC Stormwater Flood Map - Extreme Flood model. The extreme flood scenario also includes 4.8-ft of sea level rise (SLR) projected for 2080. Unfortunately, the city has not published a model of an extreme rain event with current sea level conditions. Higher tides and SLR can block storm drains and outfalls exacerbating inland flooding. Aside for SLR, the model does not account for future conditions, like new development and infrastructure deterioration or repair, nor does it account for site-specific conditions like clogged and obstructed storm drains. While the projected future sea level rise will overstate the number of properties with stormwater risk, assuming that the "drainage system is fully functioning and that the catch basins are free from debris or sediment" will undercount the number of properties at risk. CHPC's results can be explored at https://bit.ly/StormLots. For more on the extreme flood model, see the *NYC Storrmwater Resiliency Plan*, Mayor's Office of Resiliency, May 2021.

3. The 2014 New York City Building Code Appendix G304, Post-Firm Construction and Substantial Improvements, prohibit habitable space below the design flood elevation.

4. New York City regulations draw a distinction between basements and cellars, where the former is defined by having at least half of its story height above grade and the latter having more than half its height below grade. For simplicity, this paper will refer to all partially below-grade spaces as basements. For more information about the difference between basements and cellars, see the inset on page 11.

5. New York City Building Code §1208.2

6. Department of City Planning. *Zoning Handbook: A Guide to the New York City Zoning Resolution*, 2018 ed., The City of New York, 2018, pp. 8.

7. McDonnell, Simon, et al. Furman Center for Real Estate and Urban Policy, New York, NY, 2011, *Minimum Parking Requirements and Housing Affordability in New York City*.

8. Chavez, Ryan. DRAFT Review, 17 Aug. 2022

9. Wolfe, Emma, et al. *The New Normal: Combating Storm-Related Extreme Weather in New York City.* N.Y.C. Office of the Deputy Mayor for Administration, Dec. 2021.

10. Feldman, Ari Ephraim. "Fate of Basement Unit 'Census' Effort Unclear, Five Months after Ida." Spectrum News NY1, 15 Feb. 2022.

11. *Counting the Hard to Count in a Census.* U.S. Census Bureau, July 2019. Safety may be a concern for domestic violence survivors, LGBTQ+ youth, and seniors, for example.

12. Wireless Emergency Alerts (WEA). Federal Communications Commission, 3 June 2022. In 2021, roughly 1/3 of active smartphones support enhanced geo-targeting which allows wireless service providers to target emergency message with an accuracy of one-tenth of a mile, roughly equivalent to two north-south blocks. Older phones without enhanced capability may receive an alert even if the phone is located outside of the targeted area. "Geographic Accuracy of Wireless Emergency Alerts (WEAs)." FEMA, updated May 2022.

13. Smartphone ownership has grown dramatically in recent years, including among lower-income individuals. According to the Pew Research Center, 76% of adults with an annual household income under $30,000 report having a smartphone. The percent of adults with a smartphone increases along with household income—97% of adults in households making $100,000 or more report owning smartphones. Vogels, Emily A. Digital Divide Persists Even as Americans with Lower Incomes Make Gains in Tech Adoption. Pew Research Center, 10 Sept. 2021.

14. OpenDataNYC. Office of Emergency Management (OEM) Emergency Notifications. New York City. Acc. July 2022.

15. Subway operators report rushing water at 9:30 pm and shocking videos of flooding in the subway began circulating around 10:30 pm. See Guse, Clayton. "NYC Subway Crews Recount Frightening Flood from Ida: 'I've Never Seen Anything like It'." New York Daily News, 2 Sept. 2021. and Rick @ SubwayCreatures. "Wild Scene in the Subway Tonight." Twitter, 1 Sept. 2021.

16. "Emergency Warnings Choosing Your Words: A Reference Document on How to Construct the Wording of Emergency Warning Messages to the Australian Community." Commonwealth of Australia, Dec. 2008.

17. Ibid.

18. US Department of Commerce, NOAA. "Impact Based Flash Flood Warnings & WEA Changes." NOAA's National Weather Service, 26 Mar. 2020.

19. Office of the Queensland Chief Scientist. "How Do We Communicate and Warn about Floods?" Understanding Floods, Department of Environment and Science, State of Queensland, 12 June 2018.

20. 20 Murphy, S.T., et al. "Predictors of Emergency Preparedness and Compliance." Disaster Medicine and Public Health Preparedness, 2009, https://doi.org/10.1097/dmp.0b013e3181a9c6c5.

21. 2022 08 23 MOCEJ Response to CHPC Report_FINAL, NYC Mayor's Office of Climate and Environmental Justice, 2022.

22. NYC Fire Department. *Apartment Building Emergency Preparedness Guide*, 2021st ed., 2021.

23. Rule 3 RCNY Section 43-01 which requires apartment buildings and certain one- and two-family homes to provide fire safety plans took effect April 2000.

24. "Wastewater Treatment System." Wastewater Treatment System. NYC Department of Environmental Protection, 2022.

25. "New York City Water and Wastewater Rate Schedule." Rates & Regulations, New York City Water Board, July 2022.

26. In recognition of the fact that 6% of NYC's land area is covered by parking lots, DEP launched a Parking Lot Stormwater Pilot Program in 2011 that began charging parking lot owners for the stormwater runoff that they produce. Owners of lots designed to hold at least five vehicles, even those without water service, must pay a stormwater charge based on area. The initial rate of $0.05 per square foot has hardly increased since the pilot's inception nor has DEP awarded parking lot fee exemptions for the adoption of green infrastructure. "NYC Green Infrastructure Annual Report." Green Infrastructure, NYC Department of Environmental Protection, 2019.

27. The development site includes all areas subject to disturbance, including publicly maintained sidewalks and roadways. Routine maintenance or emergency-related rehabilitation activities are not subject to the requirements of the USR.

28. "DOB Job Application Filings." OpenDataNYC, Accessed Aug 8, 2022.

29. It is unlikely that all of the included projects required a stormwater permit. For example, if a demolition application was submitted for an ancillary structure like a shed, it is unlikely that the entirely of the lot would be disturbed. This would lead to an over-count of covered properties.

30. As a secondary proxy for the percent of developments potentially covered by the newly reduced disturbed area requirement, lots over 20,000 sf that had been altered according to Department of Finance (DOF) records were compared against the total number of lots altered over a ten-year period. Between 2010 and 2020, 6% of buildings on lots at least 20,000 sf in area and had alterations to their structure that changed their value. Since not all alterations would trigger a stormwater permit, this would be a conservative upper bound. CHPC performed this analysis on PLUTO21v3 data published by NYC Department of City Planning (DCP).

31. NYC Department of Environmental Protection, Stormwater Construction / Post-Construction Public Data.

32. Carter, Timothy L. University of Georgia, Athens, GA, *Stormwater Utility Handbook: A Step-by-Stem Guide to Establishing a Utility in Coastal Georgia.* 2008.

33. Natural Resources Defense Council (NRDC), *Making It Rain: Effective Stormwater Fees Can Create Jobs, Build Infrastructure, and Drive Investment in Local Communities,* 2018.

34. Carter, *Stormwater Utility Handbook*, 15-17.

35. Boyle, Christine E, et al. S*tormwater Fee Simulator for New York City*. Riverkeeper & Natural Resources Defense Council, July 2019.

36. Ibid, 37.

37. "Sustainable Rate Structure Analysis." NYC Department of Environmental Protection, 2022.

38. Qi, Man, et al. "Spatial Heterogeneity of Controlling Factors' Impact on Urban Pluvial Flooding in Cincinnati, US." Applied Geography, vol. 125, 2020, p. 102362., https://doi.org/10.1016/j.apgeog.2020.102362.

39. Qiao, Xiu-Juan, et al. "Challenges to Implementing Urban Sustainable Stormwater Management from A Governance Perspective: A Literature Review." Journal of Cleaner Production, vol. 196, 2018, pp. 943–952., https://doi.org/10.1016/j.jclepro.2018.06.049.

40. Multiple studies have shown that catchment-scale uptake of green infrastructure and stormwater management practices can reduce the impacts of stormwater flooding. See: Webber, J. L., et al. "Is Green Infrastructure a Viable Strategy for Managing Urban Surface Water Flooding?" Urban Water Journal, vol. 17, no. 7, 2019, pp. 598–608., https://doi.org/10.1080/1573062x.2019.1700286. and Shuster, William, and Lee Rhea. "Catchment-Scale Hydrologic Implications of Parcel-Level Stormwater Management (Ohio USA)." Journal of Hydrology, vol. 485, 2013, pp. 177–187., https://doi.org/10.1016/j.jhydrol.2012.10.043.

Sörensen, J., and T. Emilsson. "Evaluating Flood Risk Reduction by Urban Blue-Green Infrastructure Using Insurance Data." Journal of Water Resources Planning and Management, vol. 145, no. 2, 2019, https://doi.org/10.1061/(asce)wr.1943-5452.0001037.

41. "Turn around Don't Drown." National Weather Service, National Oceanic and Atmospheric Administration (NOAA), 29 June 2022.

42. Valderrama, Alisa, et al. Catalyzing Green Infrastructure on Private Property: Recommendations for a Green, Equitable, and Sustainable New York City. Natural Resources Defense Council (NRDC), Aug. 2017.

43. US Department of Commerce, NOAA. "Floods." National Weather Service, NOAA's National Weather Service, 24 Sept. 2014.

44. Resilient NYC Partners, NYC Department of Environmental Protection; Valderrama, Alisa. Paying Private Property Owners in NYC to "Go Green". Natural Resources Defense Council (NRDC), 31 Aug. 2017.

45. Ma, Yukun, et al. "Human Health Risk Assessment of Heavy Metals in Urban Stormwater." Science of The Total Environment, vol. 557-558, 2016, pp. 764–772., https://doi.org/10.1016/j.scitotenv.2016.03.067; Flinker, Peter. Providence Water Supply Board & the National Park Service, 2010, The Need to Reduce Impervious Cover to Prevent Flooding and Protect Water Quality.

46. Frazer, Lance. "Paving Paradise: The Peril of Impervious Surfaces." Environmental Health Perspectives, vol. 113, no. 7, Permeable pavements can be effective at reducing stormwater discharges and pollutant concentrations, though their effectiveness can be variable and depends more on the design of underlying layers and surrounding environmental conditions than surface type. 2005, https://doi.org/10.1289/ehp.113-a456.

47. U.S. Environmental Protection Agency. 2021 NPDES: Stormwater Best Management Practice–Permeable Pavements.

48. "Design Criteria for Permeable Pavement." Minnesota Stormwater Manual, Minnesota Pollution Control Agency, Apr. 2021.

49. Hunt, William F. North Carolina Cooperative Extension, 2016, *Maintaining Permeable Pavements*.

50. U.S. Environmental Protection Agency. 2012. *Reducing urban heat islands: Compendium of strategies.* Draft.

51. "Porous Asphalt." NYC Street Design Manual, 3rd ed., NYC Department of Transportation, 2020.

52. *Green Infrastructure Annual Report 2021*, NYC Department of Environmental Protection, 2021.

53. Since the Green Infrastructure Grant Program launched in 2011, it has committed $14 million dollars to 34 private property owners. While the aims of the program are laudable, 34 private properties over ten years will not reduce stormwater runoff in residential neighborhoods at risk of flooding. *Green Infrastructure Annual Report 2021*, NYC Department of Environmental Protection, 2021.

54. The program, initially launched in 2007, now offers an abatement of $5.23 per sf of green roof citywide and a $15 per sf abatement available in priority locations. *Green Roof Tax Abatement,* NYC Department of Finance.

55. *NYC Stormwater Initiatives for Private Properties*, NYC Department of Environmental Protection.

56. CHPC analysis of PLUTOv21.1 data.

57. ZR §25-65 Surfacing (residential districts), §36-55 Surfacing (commercial districts), §44-44 Surfacing (manufacturing districts)

58. "Incentive and Credit Programs." State and Municipal Incentive Programs, UNI-GROUP U.S.A.

59. Rain Check is jointly administered by the Philadelphia Water Department and the Philadelphia Horticultural Society. More information can be found here at www.pwdraincheck.org.

60. Stratus Consulting. A Triple Bottom Line Assessment of Traditional and Green Infrastructure Options for Controlling CSO Event in Philadelphia's Watersheds. 2015.

61. "DEP Offers Free Rain Barrels to New Yorkers." NYC Department of Environmental Protection, 16 Apr. 2011.

62. "More than 11,000 New Yorkers Received a Free Rain Barrel in 2016," NYC Department of Environmental Protection, 17 Nov 2016.

63. Rain Barrels NYC, RainBarrel.ca, RainBarrelFundraising.com.

64. MacLean, Camille. "Call to 311." 19 July 2022.

65. MacLean, Camille. "Call to 311." 15 August 2022.

66. *NYC Green Infrastructure Annual Report 2021*. Green Infrastructure, NYC DEP, 2022.

67. "Rain Barrel Rebate Guide." RiverSmart Department of Energy and the Environment, 2022.

68. Chittagong City, Bangladesh is a coastal urban environment with a population of roughly 5 million people. Akter, A., Tanim, A. H., & Islam, M. K. (2020). "Possibilities of urban flood reduction through distributed-scale rainwater harvesting." *Water Science and Engineering*, 13(2), 95-105. doi:doi.org/10.1016/j.wse.2021.06.001

69. Chakraborty, Jayajit, et al. "Exploring the Environmental Justice Implications of Hurricane Harvey Flooding in Greater Houston, Texas." *American Journal of Public Health*, vol. 109, no. 2, 2019, pp. 244–250., https://doi.org/10.2105/ajph.2018.304846.

70. Poon, Linda. "The Impossible Battle to Flood-Proof New York City." *CityLab + Green, Bloomberg*, 14 Apr. 2022.

71. Rose, Veronica. "DDC and DEP Announce Start of Sewer and Catch Basin Upgrades in Westerleigh". *CityLand*, 13 Apr. 2022.

72. Bluebelts are naturally occurring drainage systems in the form as wetlands, ponds, and streams that help capture runoff and promote open space. The program began in Staten Island through targeted preservation and improvement.

73. Frazer, K. Green Roofs in New York City. The Nature Conservancy.

74. Poon, L. "The Impossible Battle."

75. *NYC Green Infrastructure Annual Report 2021*, NYC Department of Environmental Protection, 2021, pp 21.

76. Poon, L. "The Impossible Battle."

77. Gallagher, L. *Before the next flood: NYC needs more progress building green infrastructure*. Center for an Urban Future (CUF). Nov. 2021.

78. *Audit Report on the Department of Environmental Protection's Maintenance of Rain Gardens* City of New York Office of the Comptroller. Dec. 2019

79. Hogan, G. "$50M southeast queens sewage project completed, mayor says." *Gothamist*. 9 Mar. 2022.

80. Kim, E. "Why One queens block has flooded for decades." *Gothamist*. Oct. 2021.

81. "Extreme Precipitation in New York & New England." Northeast Regional Climate Center (NRCC) & Natural Resources Conservation Service (NRCS), 2011.

82. Decent, Dana, and Blair Feltmate. University of Waterloo, Waterloo, ON, Canada, 2018, *After the Flood: The Impact of Climate Change on Mental Health and Lost Time from Work*.

83. 2022 NYC Building Code §1030

84. "Sewer System." NYC Department of Environmental Protection.

85. Kenward, Alyson, et al. Climate Central, *Sewage Overflows From Hurricane Sandy*, 2013.

86. Office of Enforcement and Compliance Assurance. *EPA Enforcement: Preventing Backup of Municipal Sewage into Basements*, vol. 8, no 1, Environmental Protection Agency, Sept. 2006.

87. "Backwater Valves: What You Need to Know." *Floodhelpny.org*, Center for New York City Neighborhoods.

88. Salazar, Cristian. "Center Announces Expansion of Pioneering Home Resiliency Program." Center for New York City Neighborhoods, 3 Apr. 2018.

89. Brannan, Justin. "Opinion: City Should Pay for Simple Fix to Prevent Basement Floods." *Bklyner*, 26 Aug. 2021.

90. Mckinley, J., Rubinstein, D., & Mays, J. C.. "The storm warnings were dire. why couldn't New York be protected?" *The New York Times*. 3 Sept. 2021.

91. Diaz, J., & Chappell, B. "Ida brings historic flooding to the northeast, killing more than 40 people." *NPR*. 2 Sept 2021.

92. "Leak Detection Systems Prevent Flooded Basements and Black Mold," Skilling & Sons LLC.

93. Ueno, K., & Lstiburek, J. *Bulk Water Control Methods for Foundations*. *Building Science Press*. 2010. For more information on bulk water control methods, consult the archives of technical guidance available from the Building Science Corporation, such as "BSI-110: Keeping the Water Out of Basements."

94. Ibid.

95. Maantay, Juliana, and Andrew Maroko. "Mapping Urban Risk: Flood Hazards, Race, & Environmental Justice in New York." *Applied Geography*, vol. 29, no. 1, 2009, pp. 111–124., https://doi.org/10.1016/j.apgeog.2008.08.002.

CHPC
NEW YORK CITY

42 Broadway, Suite 2010
New York, NY 10004